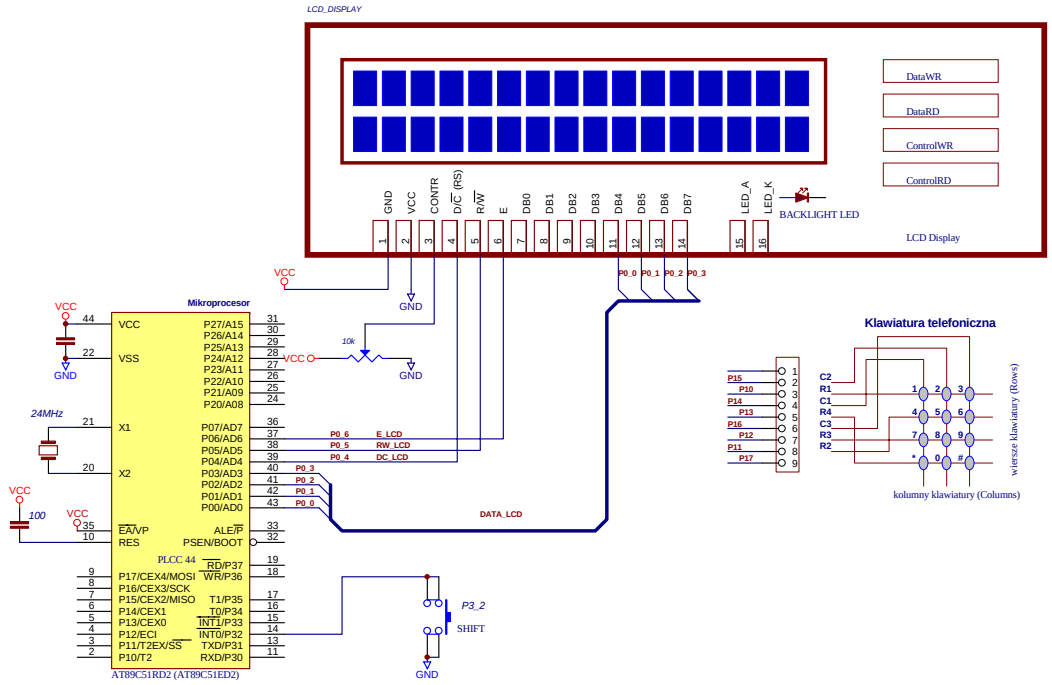
LCD_DISPLAY
DataWR
DataRD
ControlWR
ControlRD
GND
VCC
CONTR
D/C (RS)
R/W
E
DB0
DB1
DB2
DB3
DB4
DB5
DB6
DB7
LED_A
LED_K
BACKLIGHT LED
LCD Display
P0_0
P0_1
P0_2
P0_3
Mikroprocesor
VCC
VSS
X1
X2
EA/VP
RES
P27/A15
P26/A14
P25/A13
P24/A12
P23/A11
P22/A10
P21/A09
P20/A08
P07/AD7
P06/AD6
P05/AD5
P04/AD4
P03/AD3
P02/AD2
P01/AD1
P00/AD0
ALE/P
PSEN/BOOT
RD/P37
WR/P36
T1/P35
T0/P34
INT1/P33
INT0/P32
TXD/P31
RXD/P30
P17/CEX4/MOSI
P16/CEX3/SCK
P15/CEX2/MISO
P14/CEX1
P13/CEX0
P12/ECI
P11/T2EX/SS
P10/T2
PLCC 44
AT89C51RD2 (AT89C51ED2)
24MHz
100
10k
E_LCD
RW_LCD
DC_LCD
DATA_LCD
P3_2
SHIFT
Klawiatura telefoniczna
P15
P10
P14
P13
P16
P12
P11
P17
C2
R1
C1
R4
C3
R3
R2
wiersze klawiatury (Rows)
kolumny klawiatury (Columns)