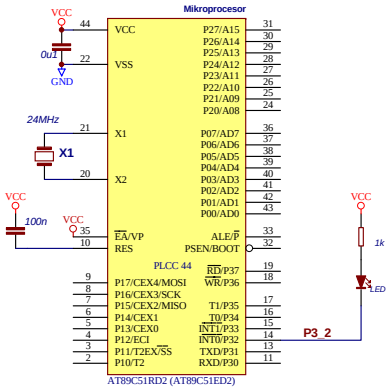

Title		
Size B	Number	Revision
Date: 11-May-2005	Sheet of	
File: F:\BTC_book4\PROTEL99_schematy\btc4_rozrawiony.ddb	Drawn by:	