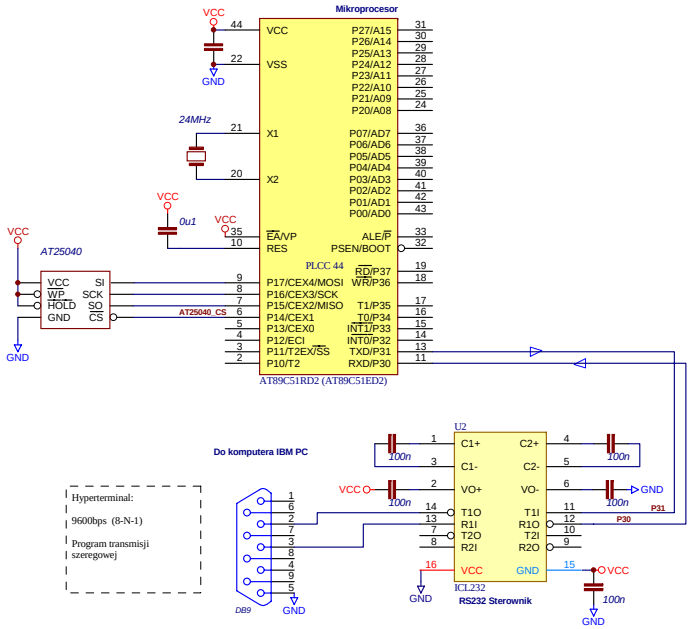
Mikroprocesor
VCC
GND
24MHz
0u1
AT25040
VCC
WP
HOLD
GND
SI
SCK
SO
CS
AT25040_CS
VCC
VSS
X1
X2
EA/VP
RES
PLCC 44
P17/CEX4/MOSI
P16/CEX3/SCK
P15/CEX2/MISO
P14/CEX1
P13/CEX0
P12/ECI
P11/T2EX/SS
P10/T2
P27/A15
P26/A14
P25/A13
P24/A12
P23/A11
P22/A10
P21/A09
P20/A08
P07/AD7
P06/AD6
P05/AD5
P04/AD4
P03/AD3
P02/AD2
P01/AD1
P00/AD0
ALE/P
PSEN/BOOT
RD/P37
WR/P36
T1/P35
T0/P34
INT1/P33
INT0/P32
TXD/P31
RXD/P30
AT89C51RD2 (AT89C51ED2)
U2
C1+
C1-
VO+
T1O
R1I
T2O
R2I
VCC
C2+
C2-
VO-
T1I
R1O
T2I
R2O
GND
ICL232
RS232 Sterownik
100n
P31
P30
Do komputera IBM PC
Hyperterminal:
9600bps (8-N-1)
Program transmisji szeregowej
DB9