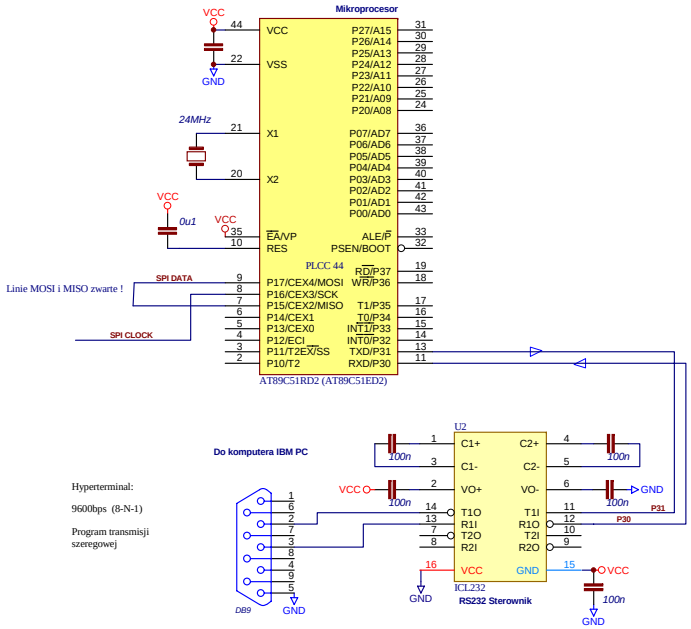
Mikroprocesor
VCC
GND
24MHz
0u1
SPI DATA
SPI CLOCK
Linie MOSI i MISO zwarte !
PLCC 44
AT89C51RD2 (AT89C51ED2)
VCC 44
VSS 22
X1 21
X2 20
EA/VP 35
RES 10
P17/CEX4/MOSI 9
P16/CEX3/SCK 8
P15/CEX2/MISO 7
P14/CEX1 6
P13/CEX0 5
P12/ECI 4
P11/T2EX/SS 3
P10/T2 2
P27/A15 31
P26/A14 30
P25/A13 29
P24/A12 28
P23/A11 27
P22/A10 26
P21/A09 25
P20/A08 24
P07/AD7 36
P06/AD6 37
P05/AD5 38
P04/AD4 39
P03/AD3 40
P02/AD2 41
P01/AD1 42
P00/AD0 43
ALE/P 33
PSEN/BOOT 32
RD/P37 19
WR/P36 18
T1/P35 17
T0/P34 16
INT1/P33 15
INT0/P32 14
TXD/P31 13
RXD/P30 11
U2
ICL232
RS232 Sterownik
C1+ 1
C1- 3
VO+ 2
T1O 14
R1I 13
T2O 7
R2I 8
VCC 16
C2+ 4
C2- 5
VO- 6
T1I 11
R1O 12
T2I 10
R2O 9
GND 15
100n
P30
P31
Do komputera IBM PC
DB9
Hyperterminal:
9600bps (8-N-1)
Program transmisji szeregowej