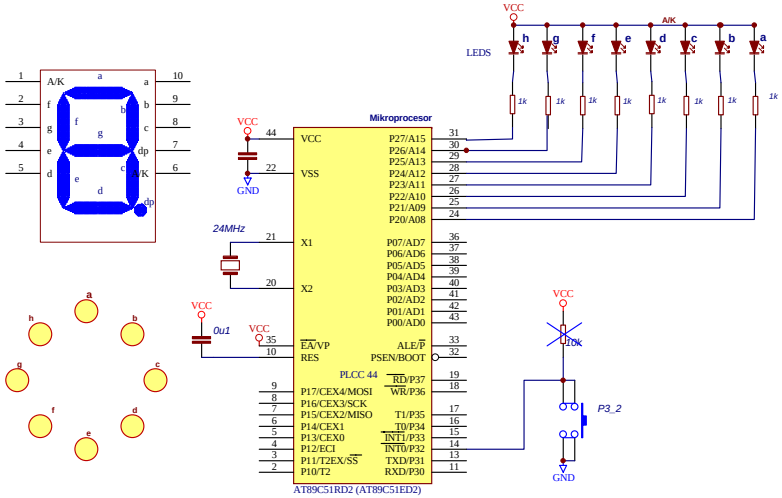
VCC
A/K
LEDS
h g f e d c b a
1k
Mikroprocesor
VCC
GND
24MHz
0u1
VCC
10k
P3_2
GND
PLCC 44
AT89C51RD2 (AT89C51ED2)