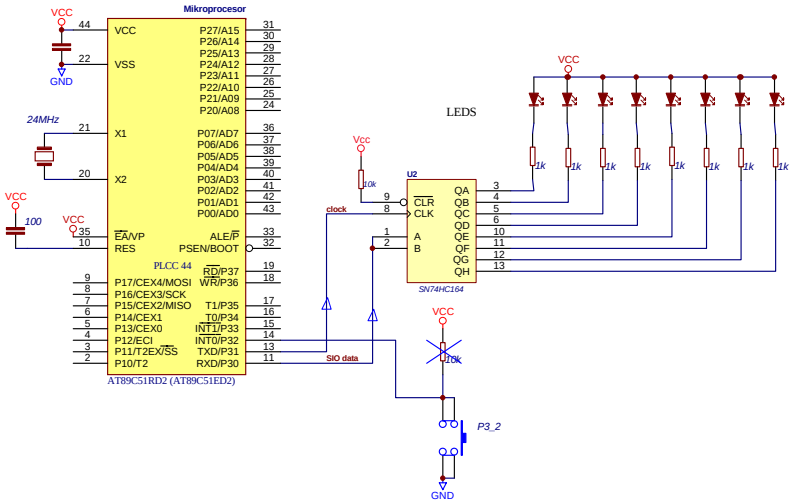
Mikroprocesor
VCC
GND
24MHz
100
VCC
VCC
44
22
21
20
35
10
VCC
X1
X2
EA/VP
RES
P27/A15
P26/A14
P25/A13
P24/A12
P23/A11
P22/A10
P21/A09
P20/A08
P07/AD7
P06/AD6
P05/AD5
P04/AD4
P03/AD3
P02/AD2
P01/AD1
P00/AD0
ALE/P
PSEN/BOOT
RD/P37
WR/P36
T1/P35
T0/P34
INT1/P33
INT0/P32
TXD/P31
RXD/P30
31
30
29
28
27
26
25
24
36
37
38
39
40
41
42
43
33
32
19
18
17
16
15
14
13
11
PLCC 44
9
8
7
6
5
4
3
2
P17/CEX4/MOSI
P16/CEX3/SCK
P15/CEX2/MISO
P14/CEX1
P13/CEX0
P12/ECI
P11/T2EX/SS
P10/T2
AT89C51RD2 (AT89C51ED2)
Vcc
10k
clock
9
8
1
2
U2
CLR
CLK
A
B
QA
QB
QC
QD
QE
QF
QG
QH
3
4
5
6
10
11
12
13
SN74HC164
SIO data
LEDS
VCC
1k
1k
1k
1k
1k
1k
1k
1k
VCC
10k
P3_2
GND