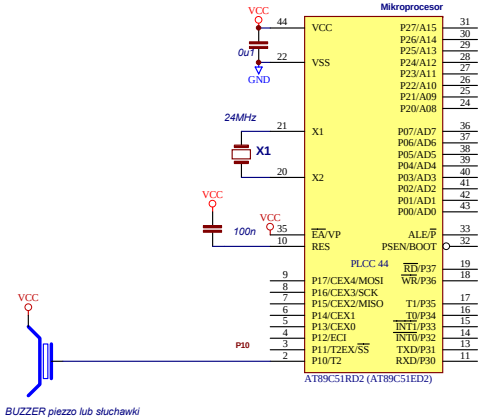
Mikroprocesor
VCC
44
VCC
0u1
22
VSS
GND
24MHz
21
X1
X1
20
X2
VCC
VCC
100n
35
EA/VP
10
RES
PLCC 44
9
P17/CEX4/MOSI
8
P16/CEX3/SCK
7
P15/CEX2/MISO
6
P14/CEX1
5
P13/CEX0
4
P12/ECI
3
P11/T2EX/SS
2
P10/T2
P27/A15
P26/A14
P25/A13
P24/A12
P23/A11
P22/A10
P21/A09
P20/A08
P07/AD7
P06/AD6
P05/AD5
P04/AD4
P03/AD3
P02/AD2
P01/AD1
P00/AD0
ALE/P
PSEN/BOOT
RD/P37
WR/P36
T1/P35
T0/P34
INT1/P33
INT0/P32
TXD/P31
RXD/P30
31
30
29
28
27
26
25
24
36
37
38
39
40
41
42
43
33
32
19
18
17
16
15
14
13
11
AT89C51RD2 (AT89C51ED2)
VCC
P10
BUZZER piezzo lub słuchawki