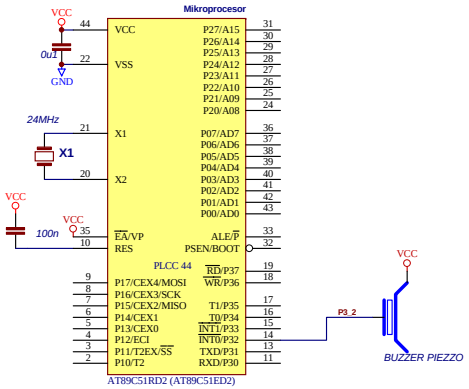
Mikroprocesor
VCC
44
VCC
0u1
22
VSS
GND
24MHz
21
X1
X1
20
X2
VCC
VCC
100n
35
EA/VP
10
RES
PLCC 44
9
P17/CEX4/MOSI
8
P16/CEX3/SCK
7
P15/CEX2/MISO
6
P14/CEX1
5
P13/CEX0
4
P12/ECI
3
P11/T2EX/SS
2
P10/T2
31
P27/A15
30
P26/A14
29
P25/A13
28
P24/A12
27
P23/A11
26
P22/A10
25
P21/A09
24
P20/A08
36
P07/AD7
37
P06/AD6
38
P05/AD5
39
P04/AD4
40
P03/AD3
41
P02/AD2
42
P01/AD1
43
P00/AD0
33
ALE/P
32
PSEN/BOOT
19
RD/P37
18
WR/P36
17
T1/P35
16
T0/P34
15
INT1/P33
14
INT0/P32
13
TXD/P31
11
RXD/P30
AT89C51RD2 (AT89C51ED2)
P3_2
VCC
BUZZER PIEZZO